On Stage with the Best

TradeTools™

MS42A

4-CHANNEL MICROPHONE SPLITTER

APPLICATION INFORMATION

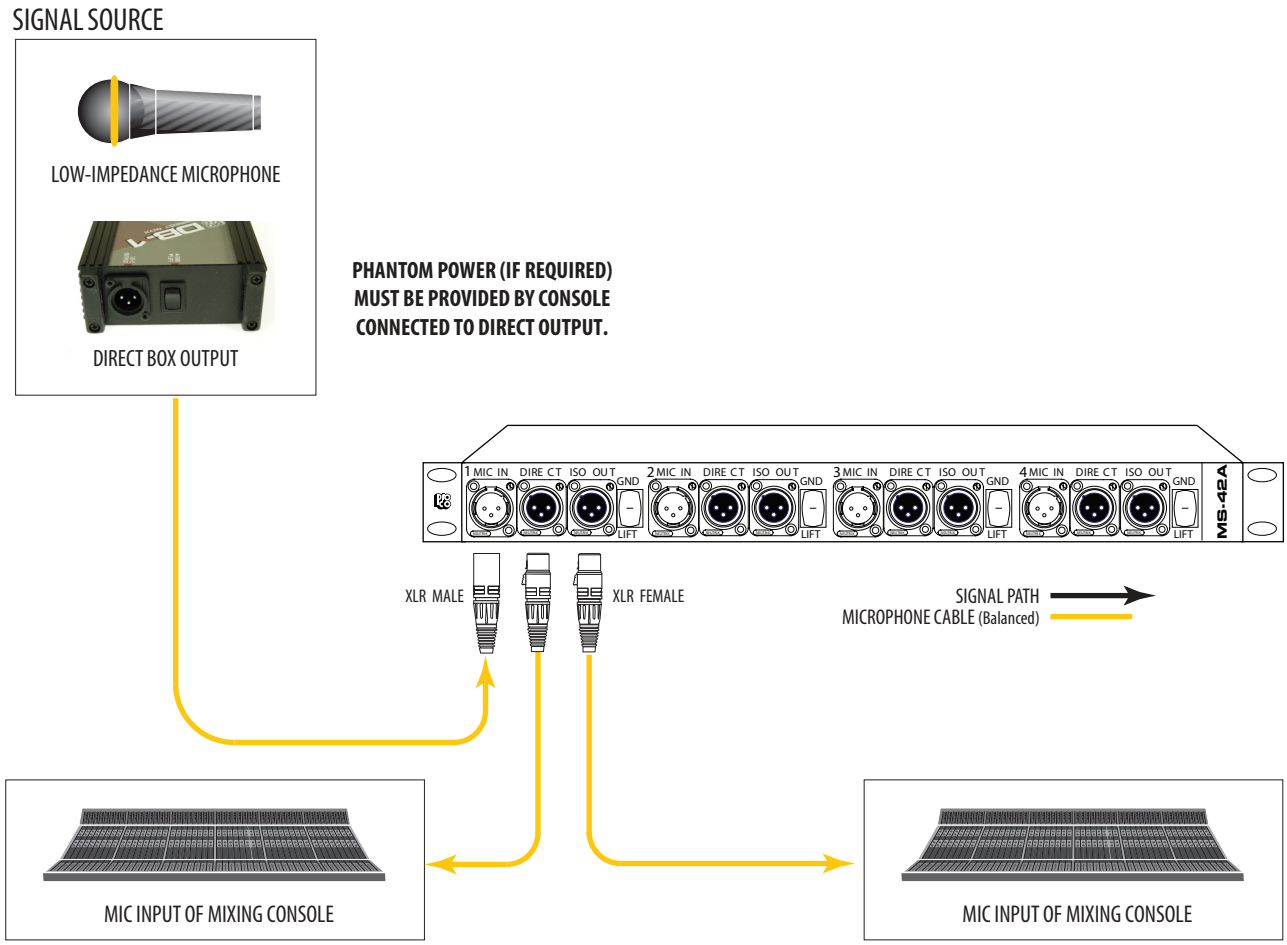

CONTROLS:

MIC IN:

Female 3-pin XLR-type connector accepts signal from low-impedance (150 ohm nominal) microphone or similar source. Input impedance (with 1.0 kohm loads on DIRECT and ISO OUTS): approx. 500 ohm.

DIRECT:

Male 3-pin XLR-type connector wired in parallel with MIC IN provides signal to feed mixer input.

ISO OUT:

Male 3-pin XLR-type connectors provide floating transformer-isolated low-impedance outputs to feed mixer inputs. Recommended load impedances: 1.0 kohm.

GND/LIFT:

GND position connects pin 1 of MIC IN \DIRECT to pin 1 of ISO OUT. LIFT position "floats" ISO OUT. Used to reduce hum and buzz by eliminating ground loops and providing proper grounding for various conditions.

Pro Co Sound
225 Parsons Street | Kalamazoo, MI 49007
800-253-7360

» www.procosound.com

NOTES:

1. **For safety reasons, all equipment with 3-wire AC line cords should be connected to properly grounded receptacles.**

   If all mixers are grounded properly, GND/LIFT switches should be set in the LIFT position for minimum hum and buzz. If this setting does not minimize hum and buzz, it may be indicative of poor grounding quality or improperly wired AC receptacles. Such conditions may be hazardous and should be investigated.

   If a GND/LIFT switch seems non-functional, check the wiring of all mic cables plugged into the unit. Cables with a jumper between pin 1 and the connector shell can defeat the GND/LIFT switches.

2. Microphones require a ground connection somewhere in the signal path. For this reason it is suggested that a properly grounded mixer always be connected to the DIRECT OUTPUT.

3. Direct boxes receiving inputs from AC-line-powered sources such as keyboards or stage amplification should have their GND/LIFT switches set to LIFT and the source equipment line cords properly connected to grounded 3-wire receptacles whenever possible. (See note 1).

4. Because of the use of transformers, DC current cannot be passed from an ISO OUT to the MIC IN. This effectively blocks phantom power such as may be required by condenser microphones and some direct boxes. Phantom power must be provided by the mixer connected to the DIRECTS, or by a suitable outboard power supply connected between the microphone and the MIC IN.

CIRCUIT DIAGRAM:

PRO CO MODEL: MS42A

DIMENSIONS 4.75" D x 19" W x 1.75" H
120.7mm D x 482.6mm W x 44.4mm H
WEIGHT.....4.70 lb/2.14 kg
SHIPPING WEIGHT.....5.00 lb/2.25 kg

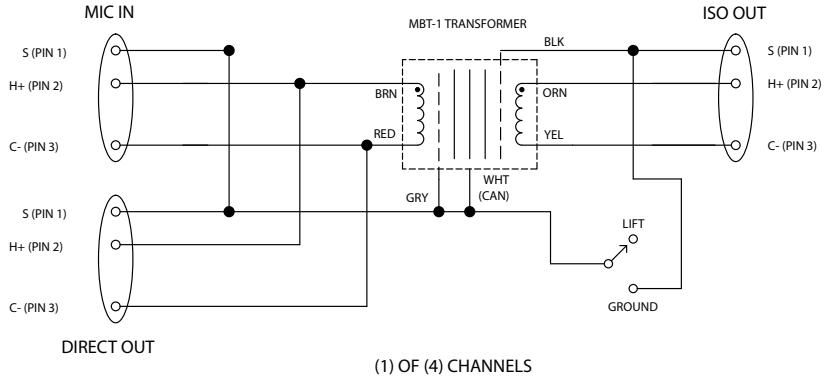

NOTE: ODD CHANNELS SHOWN EVEN CHANNELS MAGNETIC POLARITY REVERSED.

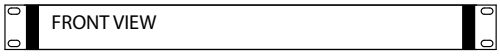

Other TradeTools™ Products from Pro Co

AV1A	Audio/Video Interface Unit
AVP1	Wallplate Format Audio/Video Interface Unit
AVP1V	Wallplate Format Audio/Video Interface Unit with Input Level Control
CB1	Direct Box
DB1	Professional Direct Box
DB2	Professional Stereo Direct Box
DB4A	Rackmount Quad Direct Box
DBA1	Professional Active Direct Box
HJ4P	Professional Stereo headphone Junction Box
HJ6	Headphone Junction Box
iFace	Portable Audio Player Interface
iGate	Universal Audio Gateway
iPlate	Wallplate Format Portable Audio Player Interface
iRack	Rackmount Portable Audio Player Interface
IT1	Isolation Transformer Unit
IT4A	Rackmount Quad Isolation Transformer Unit
IT8A	Rackmount 8-ch. Isolation Transformer Unit
LS82	Rackmount 8-ch. 1:2 Line Level Splitter
MC2	Microphone Combiner
MS2	1:2 Microphone Splitter
MS3	1:3 Microphone Splitter
MS42A	Rackmount Quad 1:2 Microphone Splitter
MS43A	Rackmount Quad 1:3 Microphone Splitter
MS82	Rackmount 8-ch. 1:2 Microphone Splitter
MS82P	Rackmount 8-ch. 1:2 Phantom Power Microphone Splitter
MS83	Rackmount 8-ch. 1:3 Microphone Splitter
MS83P	Rackmount 8-ch. 1:3 Phantom Power Microphone Splitter
RA1	Reamping Box

. . . plus our full line of audio cabling, snakes!

On Stage with the Best

Pro Co Sound
225 Parsons Street | Kalamazoo, MI 49007
800-253-7360

» www.procosound.com